COOKOLOGY

# MICROWAVE OVEN

# INSTRUCTION MANUAL

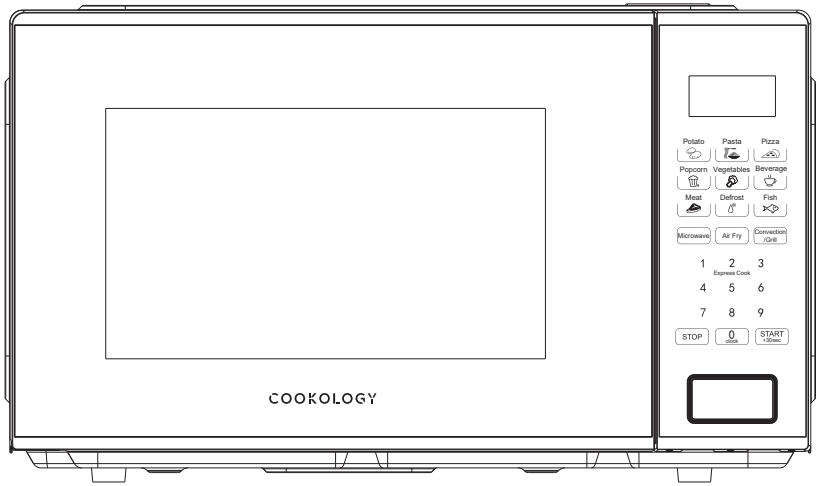


28L Air Fryer Combi Microwave-900W
Model No.: CAFMIC28LSBK/CAFMIC28LSIL

**IMPORTANT SAFETY INSTRUCTIONS**
**READ CAREFULLY AND KEEP FOR FUTURE REFERENCE**

**Please register the warranty for this product on www.Cookology.com**

# Household use only
# Please save these instructions

## IMPORTANT SAFEGUARDS

**WARNING:** If the door or door seals are damaged, the oven must not be operated until it has been repaired by a trained person.

**WARNING:** It is hazardous for anyone other than a trained person to carry out any service or repair operation, which involves the removal of any cover, which gives protection against exposure to microwave energy. WARNING: Liquids or other food must not be heated in sealed containers since they are liable to explode.

1. Only use utensils that are suitable for use in microwave ovens.
2. Metallic containers for food and beverages are not allowed during microwave cooking.
3. When heating food in plastic or paper containers, keep an eye on the oven due to the possibility of ignition.
4. The microwave oven is intended for heating food and beverages. Drying of food or clothing and heating of warming pads, slippers, sponges, damp cloth and similar may lead to risk of injury, ignition or fire.
5. If smoke is observed, switch off or unplug the appliance and keep the door closed in order to stifle any flames microwave heating of beverages can result in delayed eruptive boiling, therefore care has to be taken when handling the container.
6. The contents of feeding bottles and baby food jars are to be stirred or shaken and the temperature is to be checked before consumption, in order to avoid burns.
7. Eggs in their shell and whole hard-boiled eggs shall not be heated in microwave ovens since they may explode, even after microwave heating has ended.
8. Failure to maintain the oven in a clean condition could lead to deterioration of the surface that could adversely affect the life of the appliance and possibly result in a hazardous situation.

9. The appliance must not be placed in a cabinet.
10. Care should be taken not to displace the turntable when removing containers from the appliance.
11. The appliance shall not be cleaned with a steam cleaner.

**Warning:** When the appliance is operated in the combination mode, children should only use the oven under adult supervision due to the temperatures generated.



**CAUTION: HOT SURFACE**

12. If the supply cord is damaged, it must be replaced by the manufacturer or its service agent or a similarly qualified person in order to avoid a hazard.
13. This appliance should not be used by children.
14. This appliance is intended to be used in household and similar applications such as:

    - staff kitchen areas in shops, offices and others working environments;

    - farm houses;

    - by clients in hotels, motels and other residential type environments;

    - bed and breakfast type environments. The appliances are not intended to be operated by means of an external timer or separate remote-control system.
15. Do not place the glass turntable into cold water immediately after use as this may cause it to crack. (exclude this from the flatbed microwave)

16. The internal LED light has a rating of <60lm
17. If the appliance is not operated within 15 minutes of being plugged in, or after completing its operation, it will enter standby mode. In standby mode, the power consumption does not exceed 0.8W.

## INSTALLATION

1. Take out all the packing. If there is a safe film over the oven, tear it off before use. Check carefully for damage. If any, immediately notify dealer or send to the manufacturer's service center.
2. Microwave ovens must be placed under dry and non-corrosiveness environments, kept away from heat and humidity, such as gas burner or water tank.
3. To ensure sufficient ventilation, the distance of the back of microwave to the wall should be at least 20 cm, the side to the wall should be at least 5 cm, the free distance above the top surface at least 20 cm. the distance of the microwave to the ground should be at least 85 cm.
4. The position of the oven shall be such that it is far from the TV, Radio or antenna as picture disturbance, or noise may occur. The distance should be more than 5m.
5. The appliance must be positioned so that the plug is accessible, and must ensure a good grounding in case leakage, ground loop can be formed to avoid electric shock.

6. The microwave oven must be operated with the door closed.
7. The microwave oven must not be placed in a cabinet. The microwave oven is intended to be used freestanding.
8. As there is manufacturing residue or oil remained on the oven cavity or heat element, it usually would smell the odor, even a slight smoke, It is normal case and would not occur after several times use, keep the door or window open to ensure good ventilation. So it is strongly recommended to place a cup of water in the cavity, setting at high power and operate for several times.

## CLEANING

### MICROWAVE OVEN CARE

### ⚠ CAUTION

The oven should be cleaned regularly and any food deposits removed.

### ⚠ WARNING

a. Remove the power cord from the wall outlet before cleaning. After cooling products. Don't immerse the appliance in water or other fluids when cleaning.
b. Failure to maintain the oven in a clean condition could lead to deterioration of the surface that could adversely affect the life of the appliance and possibly result in a hazardous situation.
c. Never use hard detergent, gasoline, abrasive powder or metal brush to clean any part of the appliance.
d. Do not remove the waveguide cover.
e. When the microwave oven has been used for a long time, there may be some strange odors exist in oven, following 3 methods can get rid of them:

   1) Place several lemon slices in a cup, then heat with high micro power for 2-3 min.

2) Place a cup of red tea in oven, then heat with high micro power.

3) Put some orange peel into oven, and then heat them with high micro power for 1 minute.

f. When the product is not used, it should be placed in dry and ventilated areas as well as possible.

## ⚠ WARNING

Details how to clean surfaces in contact with food:

After use wipe the waveguide cover with a damp cloth, followed by dry cloth to remove any food splashes and grease. Built -up grease may overheat and begin to cause smoke or catch fire.

### TIPS FOR CLEANING

Details for cleaning door seals, cavity and adjacent parts:

**Exterior:**

Wipe the enclosure with a dampened soft cloth.

**Door:**

Using a dampened soft cloth, wipe clean the door and window.

Wipe the door seals and adjacent parts to remove any spill or spatter.

Wipe the control panel with a slightly dampened soft cloth.

**Interior walls:**

Wipe clean the interior surfaces with a dampened soft cloth.

Wipe clean the waveguide cover to remove any food splashed.

**Turntable / Rotation ring / Rotation axis:**

Wash with mild soap water.

Rinse with clean water and allow drying thoroughly.

## PRODUCT INSTRUCTION

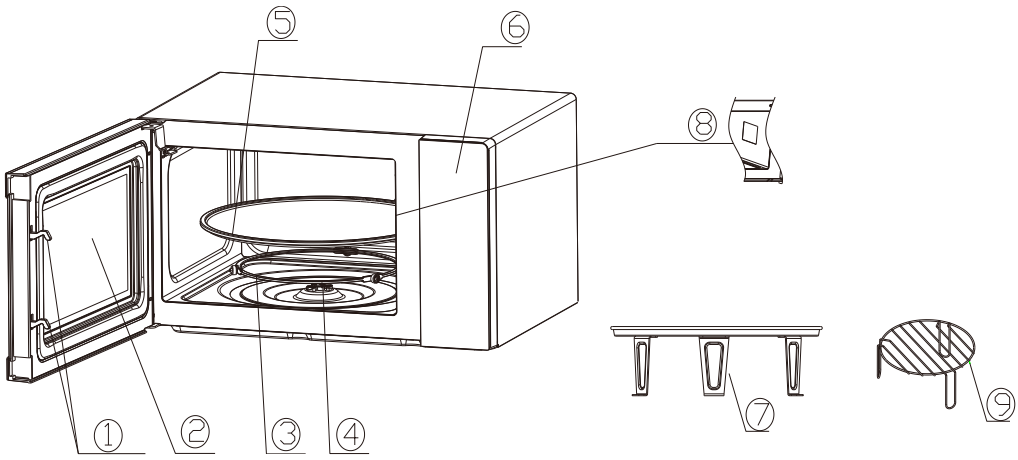


1) **Door lock**
Microwave oven door must be properly closed in order for it to operate.

2) **Viewing window**
Allow user to see the cooking status.

3) **Rotating ring**
The glass turntable sits on its wheels; it supports the turntable and helps it to balance when rotating.

4) **Rotating axis**
The glass turntable sits on the axis; the motor underneath it drives the turntable to rotate.

5) **Turntable**
The food sits on the turntable, its rotation during operation helps to cook food evenly.

**⚠ CAUTION**
- Place the rotating ring first.

- Fit the turntable onto the rotating axis and make sure that it is geared in properly.

6) **Control panel**

See below in details (the control panel is subject to change without prior notice).

7) **Baking tray**

8) **Waveguide cover**

It is inside the microwave oven, next to the wall of control panel.

**⚠ WARNING**

Never remove the waveguide cover

9) **Grill rack**

Use to place the roasting food.

## USE OF ACCESSORIES

The accessories of this microwave oven include a turntable glass tray and a rotating ring. Before use, the rotating ring should be placed on the bottom track of the cavity, and then the turntable glass tray should be placed on the rotating axis and fall into it, so that the three are properly matched and fixed. Please refer to the above figure for details.

A microwave oven with coloring or grilling function, and accessories include a microwave oven specific baking tray and grill rack. The baking tray and grill rack must be placed on a turntable glass tray for use and must not come into contact with the cavity.

# OPERATION OF CONTROL PANEL

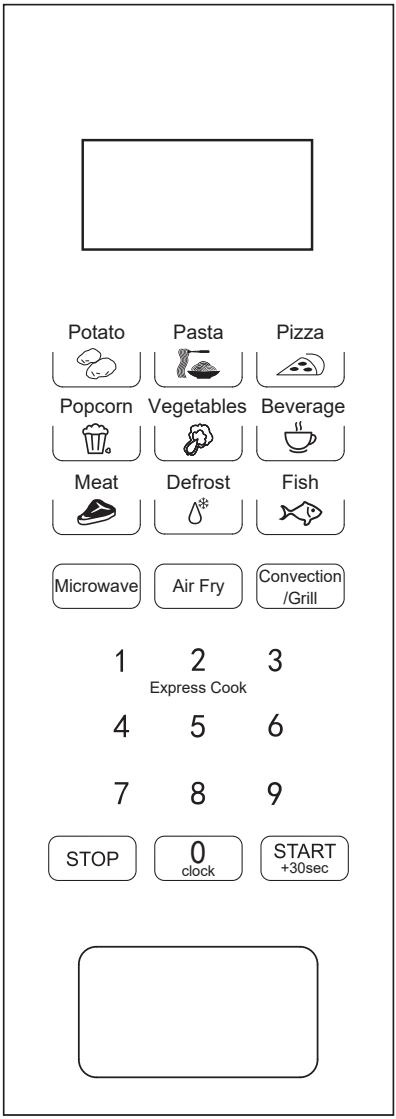


## 1. BEFORE COOKING

The display lights up when plugged in power supply, then enter the standby state and display shows 1:00.

## 2. MICROWAVE FUNCTION

There are ten microwave power levels, 100P, 90P, 80P, 70P, 60P, 50P, 40P, 30P, 20P and 10P, respectively. Press the “Micro.” button continuously and select the desired microwave power. Press 0~9 number buttons to input the cooking time, the maximum time that can be input is 99:99. After entering the cooking time, press “START/+30s” button to start work. An buzzing sound to notify completion of the operation.

| | | |
|---|---|---|
| HIGH | 100% and 90% power output | (Applicable for quick and thorough cooking) |
| M.High | 80% and 70% power output | (Applicable for medium express cooking) |
| Med | 60% and 50% power output | (Applicable for steaming food) |
| M.Low | 40% and 30% power output | (Applicable for defrosting food) |
| LOW | 20% and 10% power output | (Applicable for keeping warm) |

### ⚠ CAUTION

a. The max time which can be set is 99 minutes and 99 seconds.

b. Never use the grill rack during microwave cooking.

c. Never operate the oven empty.

d. At the maximum microwave power, the oven will automatically lower the power after a certain time of cooking to lengthen the service life.

e. If you turn the food during operation, press the **Start/+30s** button once and the preset cooking procedure will continue.

f. If you intend to remove the food before the preset time, you must press **Stop** button once to clear the preset procedure to avoid unintended operation of next time use.

### 3. DEFROST

There are two defrost mode, dEF1 and dEF2, respectively. dEF1 for defrost by weight and dEF2 for defrost by time. Press “Defrost” button to select defrost by weight or by time, and the display screen corresponding displays "dEF1" or "dEF2". Press 0~9 number buttons to input the food weight or defrosting time. The weight range of dEF1 is from 100 to 1500g, and the maximum time that dEF2 can be entered is 99:99. After entering, press the “START/+30s” button start to work. An buzzing sound to notify completion of the operation. The dEF1 defrost mode by weight will have beeping sound to prompt the food to be turned over during defrosting.

Below is some food defrosting time advice:

| | |
|---|---|
| dEF1 | For defrosting, the weight range from 100 to 1500g. |
| dEF2 | For defrosting, the maximum time is 99:99. |

### ⚠ CAUTION

a. It is necessary to turn over the food during operation to obtain uniform effect.

b. Usually defrosting will need longer time than that of cooking the food.

c. If the food can be cut by knife, the defrosting process can be considered completed.

d. Microwave penetrates around 4cm into most food

e. Defrosted food should be consumed as soon as possible, it is not advised to put back to fridge and freeze again.

## 4. AUTO COOKING

There are eight automatic menus, popcorn A.1~A.8, potato, pasta, pizza, popcorn, vegetable, beverage, meat and fish respectively. Select the desired auto menu button and press the corresponding menu button which to be selected continuously to select the desired food portion size, and the display shows the corresponding portion size. After selecting the cooking portion size, press “START/+30s” button to start work. An buzzing sound to notify completion of the operation.

| Display | Kind | Method |
|---|---|---|
| **A.1** | **Potato** | The optional weights are 250g, 500g and 750g |
| **A.2** | **Pasta** | The optional weights are 50g, 100g and 150g |
| **A.3** | **Pizza** | The optional weights are 200g and 400g |
| **A.4** | **Popcorn** | The optional weight is 100g |
| **A.5** | **Vegetable** | The optional weights are 200g, 400g and 600g |
| **A.6** | **Beverage** | The optional portion sizes---1 cup, 2 cups or 3 cups, each one about 250ml. |
| **A.7** | **Meat** | The optional weights are 200g, 400g and 600g |
| **A.8** | **Fish** | The optional weights are 200g, 400g and 600g |

## ⚠ CAUTION

a. The temperature of food before cooking would be 20-25℃. Higher or lower temperature of the food before cooking would require increase or decrease of cooking time.

b. The temperature, weight and shape of food will largely influence the cooking effect. If any deviation has been found to the factor noted on above menu, you can adjust the cooking time for best result.

### 5. CONVECTION/GRILL FUNCTION

There are six modes. They are convection, combination 1 of convection and microwave cooking, combination 2 of convection and microwave cooking, grill, combination 1 of grill and microwave cooking and combination 2 of grill and microwave cooking. The display screen displays “5 temperature shifts”, “C-1”, “C-2”, "G.", "G-1" and "G-2". The specific operation steps are as follows.

Press the button to select the desired mode, and the display screen displays “5 temperature shifts”, “C-1”, “C-2”, "G.", "G-1" or "G-2". Then, press the 0~9 number buttons to input the cooking time, the maximum time that can be entered is 99:99. After entering the cooking time, press the “START/+30s” button to start the work. An buzzing sound to notify completion of the operation.

| | |
|---|---|
| Convection | There are five temperature shifts can be set. |
| C-1 | Combination of convection and microwave cooking. 30% microwave and 70% convection. |
| C-2 | Combination of convection and microwave cooking. 55% microwave and 45% convection. |
| G. | Grill, the heat element will be energized during operation time. Which is applicable for rolling thin meats or pork, sausage, chicken wing as good brown color can be obtained |
| G-1 | Combination of grill and microwave cooking. 30% microwave and 70% grill. |
| G-2 | Combination of grill and microwave cooking. 55% microwave and 45% grill. |

## ⚠ CAUTION

In the mode of convection and grill, all of the oven parts, as well as the rack and cooking containers, may become very hot. Use caution when removing any item from the oven. Use heavy potholders or oven mitts to PREVENT BURNS.

### 6. AIR FRY

Air fry function (with 5 temperature shifts), the specific operation is as follows.

Press this button continuously to select the desired mode, and the display screen will show 5 corresponding temperature shifts. Press the 0~9 number buttons to input the cooking time, the maximum time that can be entered is 99:99. After entering the

cooking time, press the “START/+30s” button to start the work. An buzzing sound to notify completion of the operation.

| | |
|---|---|
| Air fry | There are five temperature shifts can be set. |

## ⚠ CAUTION

In the mode of air fry, all of the oven parts, as well as the rack and cooking containers, may become very hot. Use caution when removing any item from the oven. Use heavy potholders or oven mitts to PREVENT BURNS.

### 7. EXPRESS COOK

**7.1** In standby mode, you can directly press the 1~6 number buttons, and the working time is 1~6 minutes, that is, press 1 to work for 1 minute, press 2 to work for 2 minutes, and so on. After select the time, press “START/+30s” button to start work, an buzzing sound to notify completion of the operation.

**7.2** In standby mode, after putting food in and closing the door, press the “START/+30s” button to start the microwave quickly. The default working time is 30 seconds. In the working process, press the “START/+30s” button once for 30 seconds. An buzzing sound to notify completion of the operation.

### 8. 0/CLOCK

The clock function and "0" button are combined in one button. The clock is 24-hour system. The operation of the clock function is as follows:

In standby mode, press and hold down the “0/Clock” button for more than 3 seconds to enter the clock setting interface, press the 0 ~ 9 number buttons to input the clock time directly and press the “START/+30s” button to confirm the set time and exit the clock setting mode.

**9. STOP**

In the process of cooking settings, can press “STOP” button to cancel the settings and return to standby state. In the process of microwave oven working, can press “STOP” button to pause. In the paused state, can press “STOP” button again to cancel the function and return to standby state.

**10. START/+30s**

After setting the cooking time or food weight, press “START/+30s” button to start microwave oven immediately. In working state, can press “START/+30s” button to increase time, press one time to increase 30 seconds, but the menu mode and weight defrosting mode cannot adjust time. In paused state, can press “START/+30s” button to continue the microwave oven before cooking mode.

**11. CHILD LOCK FUNCTION**

Use this feature to lock the control panel when you are cleaning or so that children cannot use the oven unsupervised. All the buttons are rendered inoperable in this mode.

1) Set lock: In standby mode, press and hold down the "STOP" button for more than 3 seconds, the child lock function is activated, and all buttons of the microwave oven cannot be operated.

2) Cancel lock: In the child lock state, press and hold down the "STOP" button for more than 3 seconds to cancel the child lock function.

## UTENSILS GUIDELINE

It is strongly recommended to use the containers which are suitable and safe for microwave cooking. Generally speaking, the containers which are made of heat-resistant ceramic, glass or plastic are suitable for microwave cooking. Never use the metal containers for microwave cooking and combination cooking as spark is likely to occur. You can take the reference of below table.

| Material of container | Microwave | Grill | Combi | Notes |
|---|---|---|---|---|
| Heat-resistant ceramic | Yes | Yes | Yes | Never use the ceramics which are decorated with metal rim or glazed. Recommend using ceramics, high-temperature resistant glass, and plastic containers that can withstand temperatures above 120℃. |
| Heat-resistant plastic | Yes | No | No | Can not be used for long time microwave cooking |
| Heat-resistant glass | Yes | Yes | Yes | |

| | | | | |
|---|---|---|---|---|
| Plastic film | Yes | No | No | It should not be used when cooking meat or chops as the over-temperature may do damage to the film |
| Grill rack | No | Yes | Yes | The grill rack can only be used in grill, convection, air fry and combination mode. |
| Baking tray | No | Yes | No | The baking tray can be used in grill, convection and air fry mode. |
| Metal container | No | No | No | It should not be used in microwave oven. Microwave can not penetrate through metal. |
| lacquer | No | No | No | Poor heat-resistant. Can not be used for High-temperature cooking |
| Bamboo wood and paper | No | No | No | Poor heat-resistant. Can not be used for High-temperature cooking |

## ⚠ CAUTION

Metal utensils are not allowed to be used (except when using the grill function, convection function and air fry function, the product comes with grill rack or baking tray can be used to cook food, and the grill rack or baking tray must not come into contact with the cavity).

The combination function of grill and microwave cooking and combination function of convection and microwave cooking, can be used to cook food using a grill rack, but cannot be used to cook food using a baking tray.

## COOKING TIPS

The following factors may affect the cooking result:

**Food arrangement**

Place thicker areas towards outside of dish, the thinner part towards the centre and spread it evenly. Do not overlap if possible.

**Cooking time length**

Start cooking with a short time setting, evaluate it after it times out and extend it according to the actual need. Over cooking may result in smoke and burns.

**Cooking food evenly**

Food such as chicken, hamburger or steak should be turned once during cooking.

Depending on the type of food, if applicable, stir it from outside to centre of dish once or twice during cooking

**Allow standing time**

After cooking times out, leave the food in the oven for an adequate length of time, this allows it to complete its cooking cycle and cooling it down in a gradual manner

**The food is cooked when**

The colour and texture of the food will help determins when it is ready. Please check the following:

-Is steam coming from the whole area of the food or just the edges?

-Poultry joints can be moved easily

-Pork or poultry juice runs clear

-Fish is opaque and can easily be shared with a fork

**Browning dish**

When using a browning dish or self-heating container, always place a heat-resistant insulator such as a porcelain plate under it to prevent damage to the turntable and rotating ring.

**Microwave safe plastic wrap**

When cooking food with high fat content, do not allow the plastic wrap come into contact with food as it may melt

**Microwave safe plastic cookware**

Some microwave safe plastic cookware might not be suitable for cooking foods with high fat and sugar content. Also, the preheating time specified in the dish instruction manual must not be exceeded

## MAINTENANCE

### SERVICING

Please check the following before calling for services.

1. Place one cup of water (approx.150ml) in a glass measure in the oven and close the door securely. Oven lamp should go off if the door is closed properly. Let the oven work for 1 min.

2. Does the oven lamp light?

3. Does the cooling fan work?

(Put your hand over the rear ventilation openings.)

4. Does the turntable rotate?

(The turntable can rotate clockwise or counter clockwise. This is quite normal.)

5. Is the water inside the oven hot?

If “NO” is the answer to any of the above questions, please check your wall socket and the fuse in your meter box.

If both the wall socket and the fuse are functioning properly, Contact your nearest Service Centre.

| Correct Disposal of this product | |
|---|---|
|  | This marking indicates that this product should not be disposed with other household wastes throughout the EU. To prevent possible harm to the environment or human health from uncontrolled waste disposal, recycle it responsibly to promote the sustainable reuse of material resources. To return your used device, please use the return and collection systems or contact the retailer where the product was purchased. They can take this product for environmental safe recycling. |

Please register the warranty for this product on www.Cookology.com

**COOKOLOGY T/A THE WRIGHT BUY LTD**
**7 Meadow Business Park Piperell Way Haverhill Suffolk**
**CB9 8QX**